Ugly 1

Designed by Glen Hathaway
(Airfoil "borrowed" from Tadpole)
(Fuselage "borrowed" from Orion)
Wingspan ..... 30"
Wing Chord .....12 5/8"
Engine ..... .15 to .25

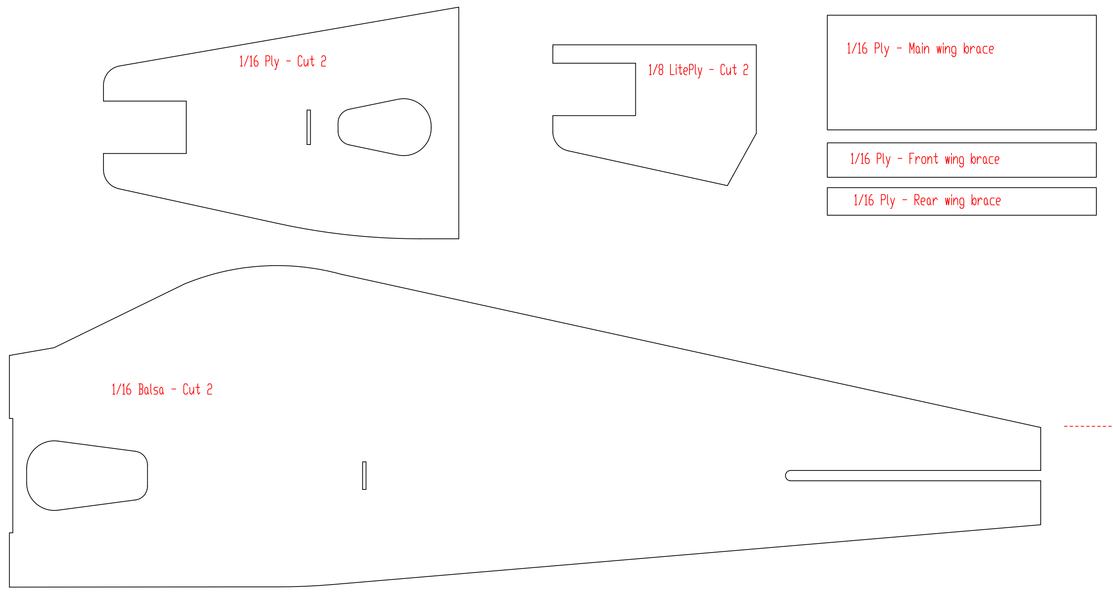

1/16 Ply - Main wing brace

1/16 Ply - Front wing brace
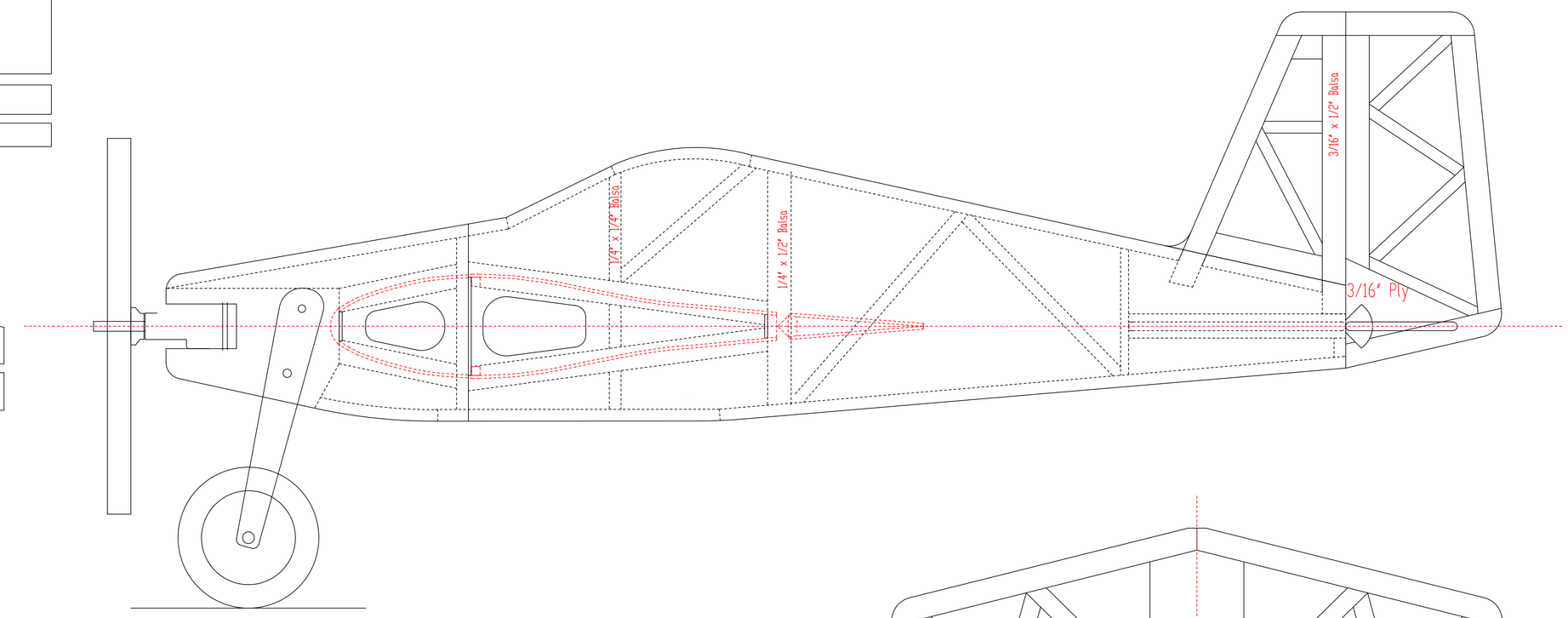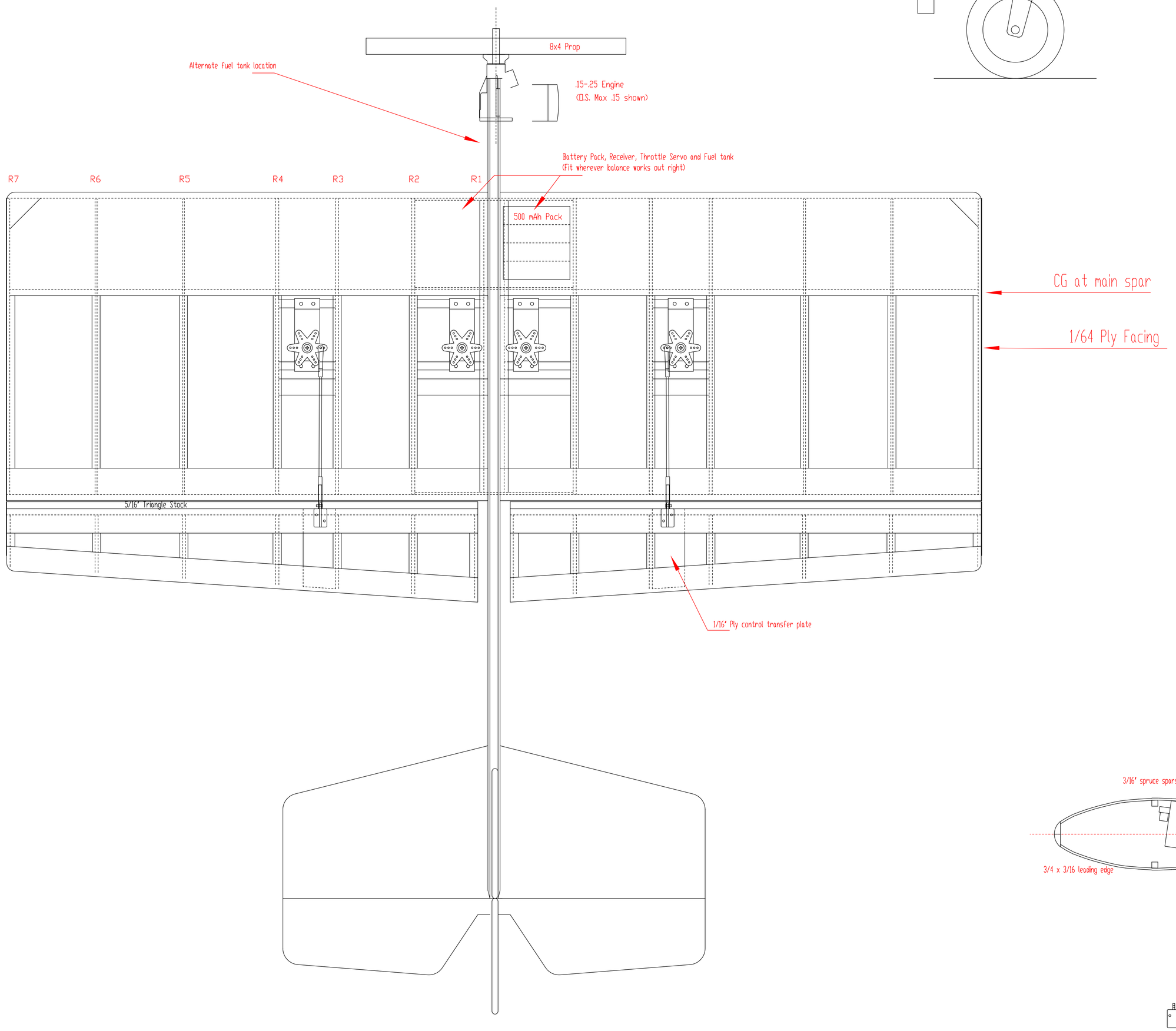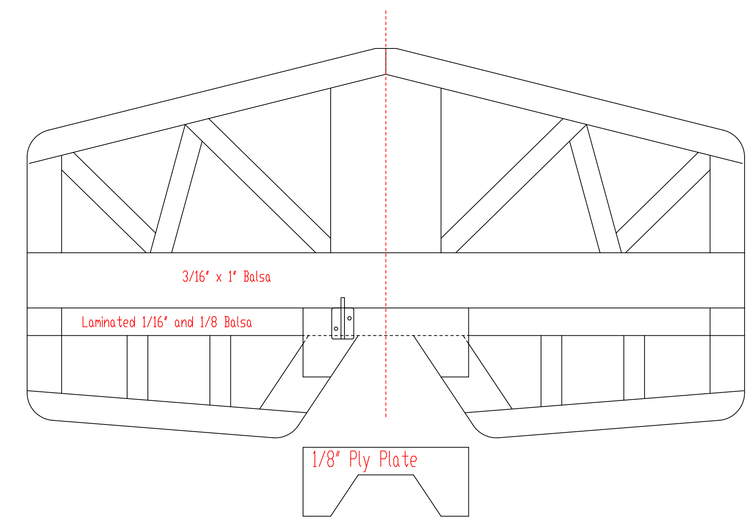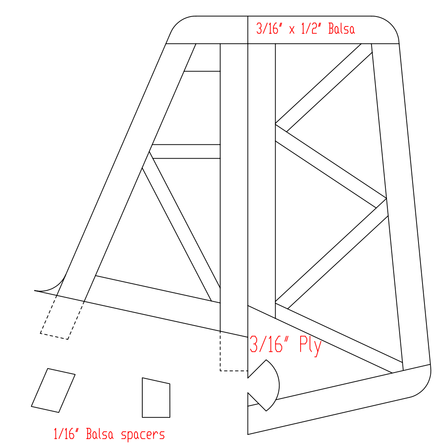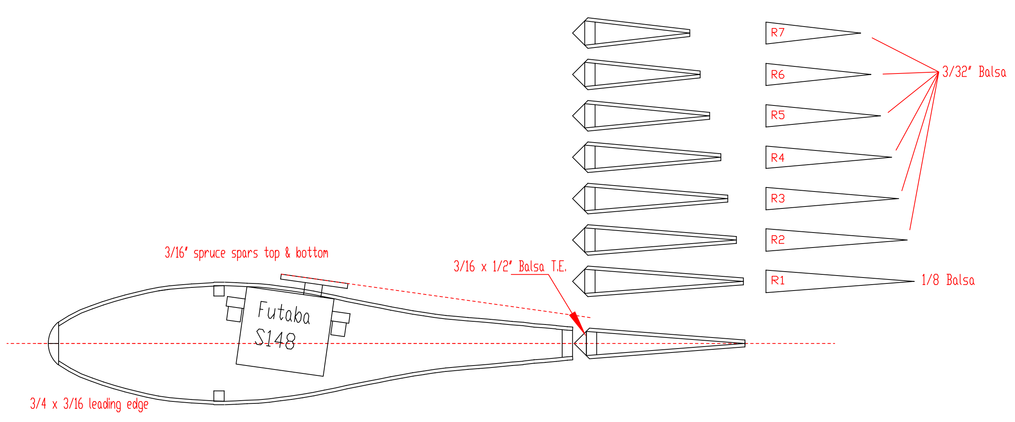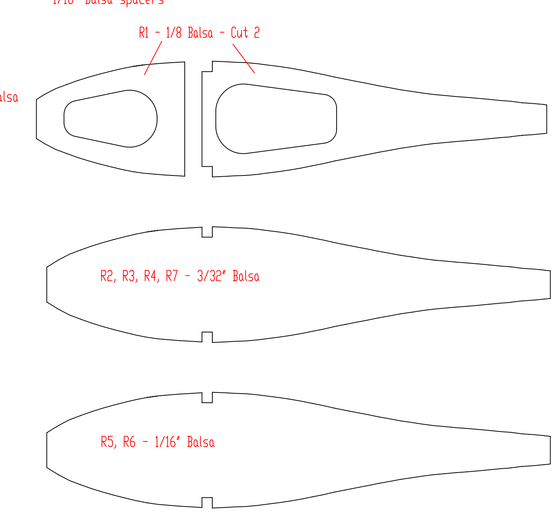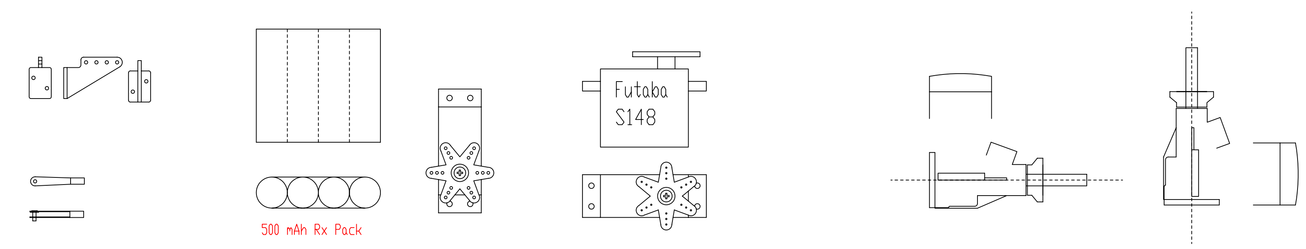
1/16 Ply - Rear wing brace