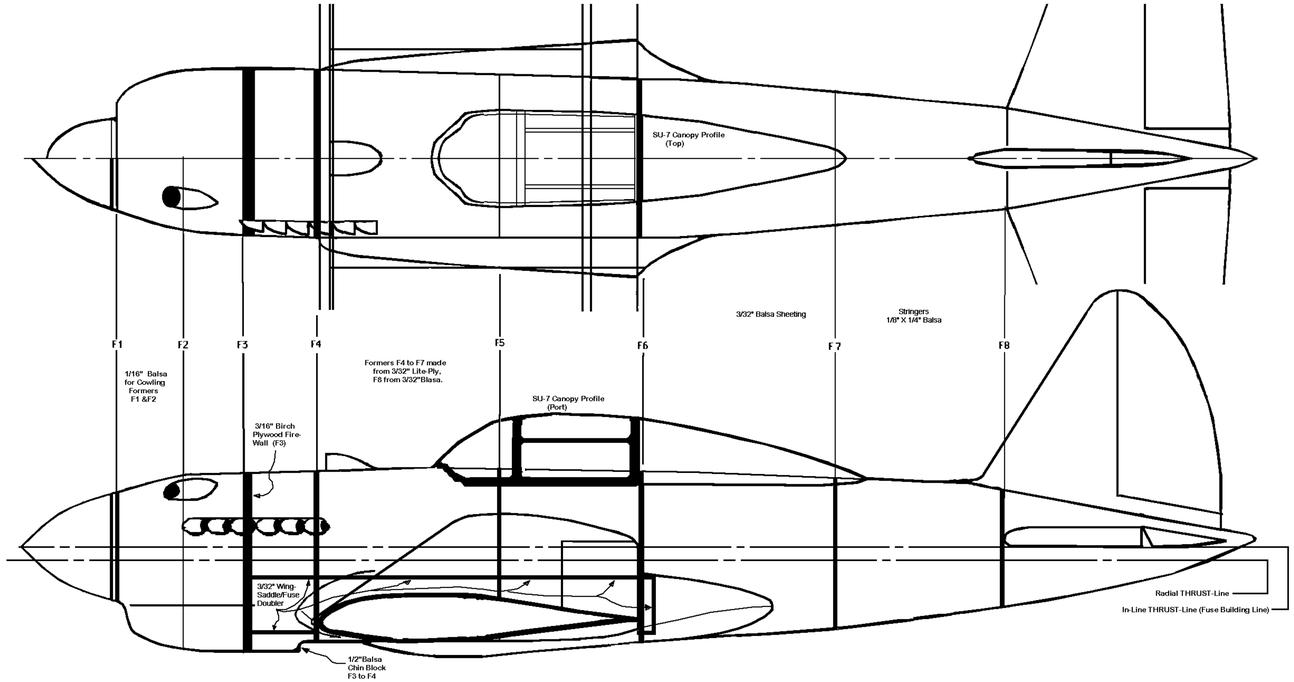

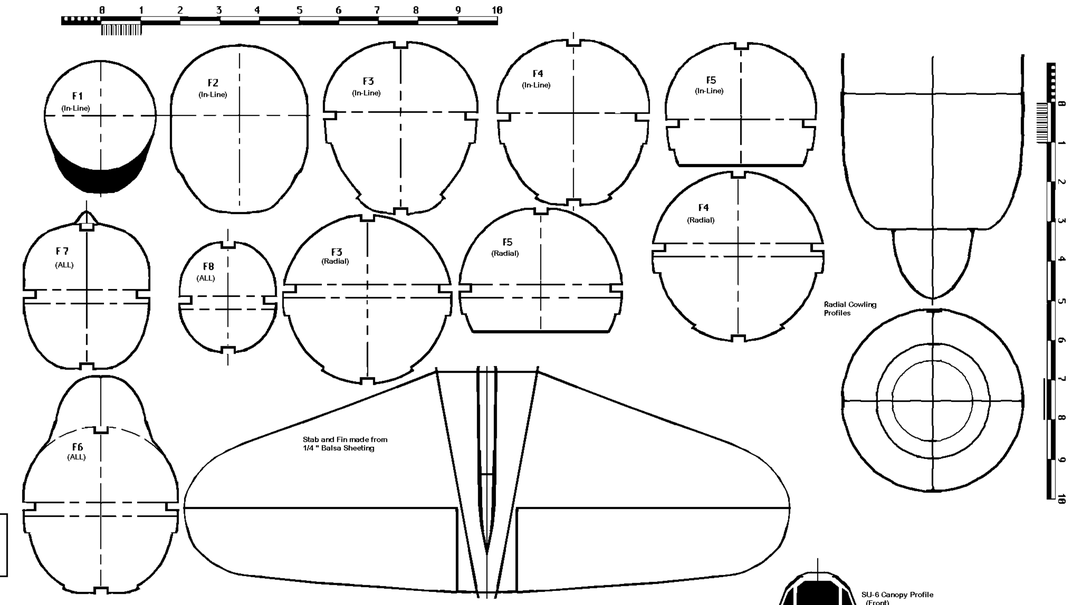

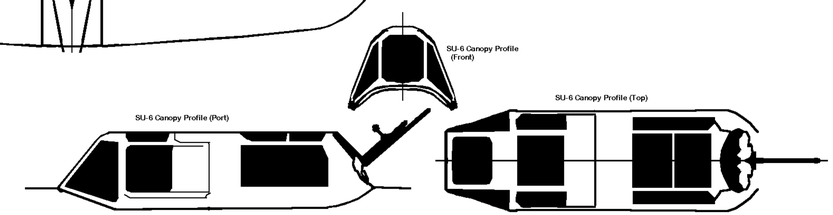

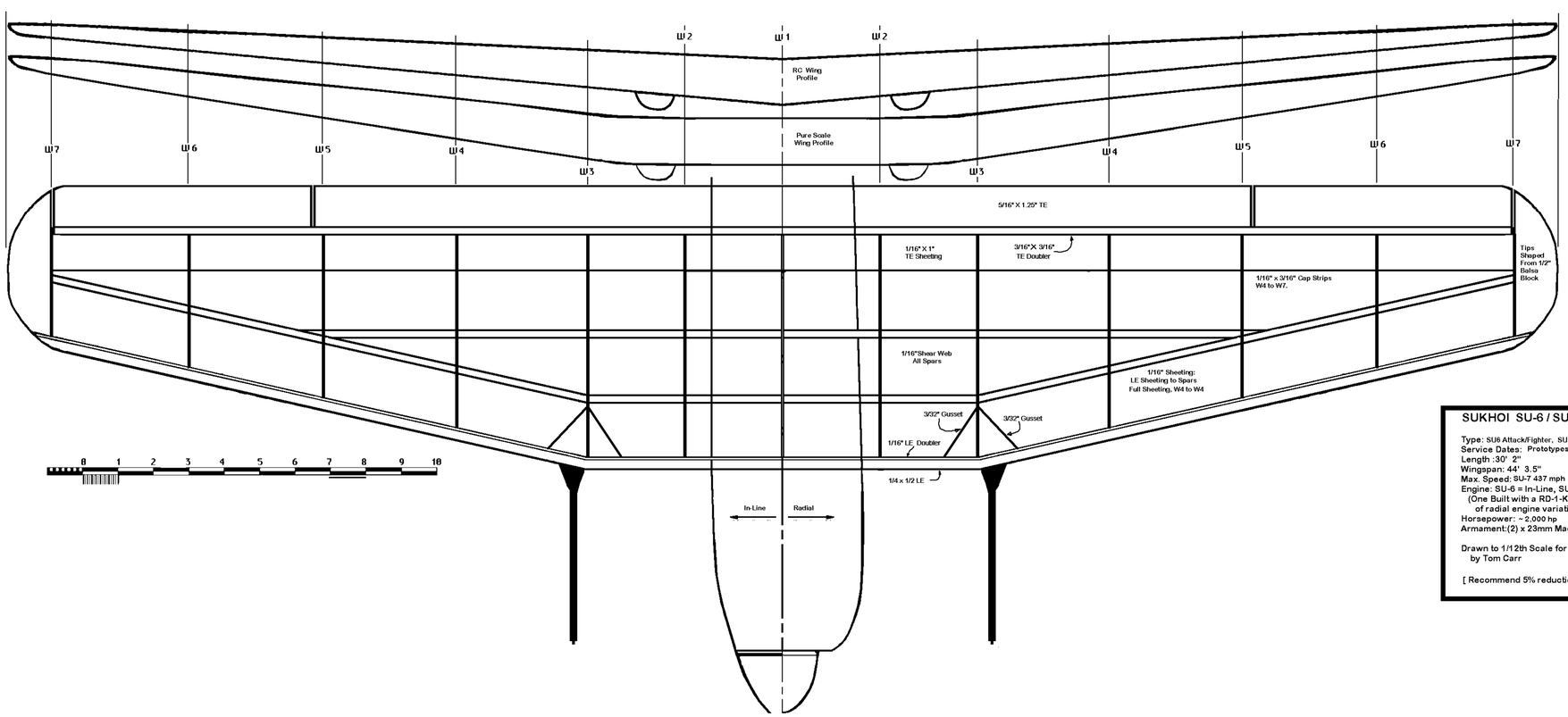

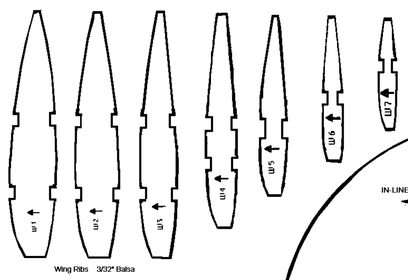

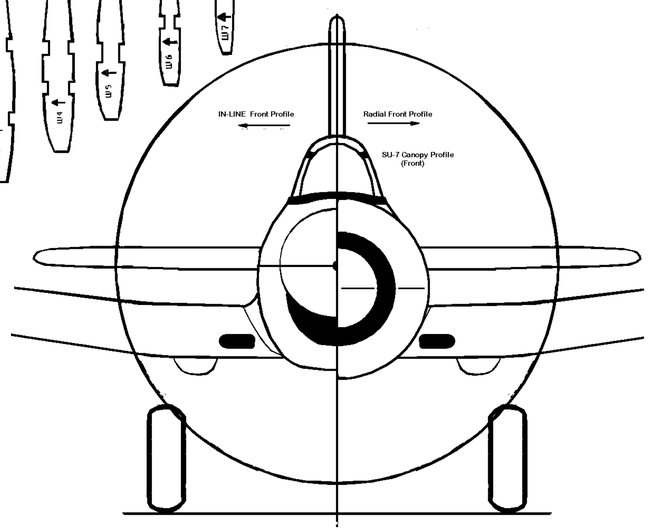

SUKHOI SU-6 / SU-7

Type: SU6 Attack/Fighter, SU7 Experimental Interceptor
Service Dates: Prototypes, 1942 - 1944
Length: 30' 2"
Wingspan: 44' 3.5"
Max. Speed: SU-7 437 mph
Engine: SU-6 = In-Line, SU-7 = Radial
(One Built with a RD-1-KhS rocket assist of radial engine variation)
Horsepower: ~ 2,000 hp
Armament: (2) x 23mm Machine Guns

Drawn to 1/12th Scale for 704 Combat by Tom Carr

[Recommend 5% reduction to 42" wingspan]