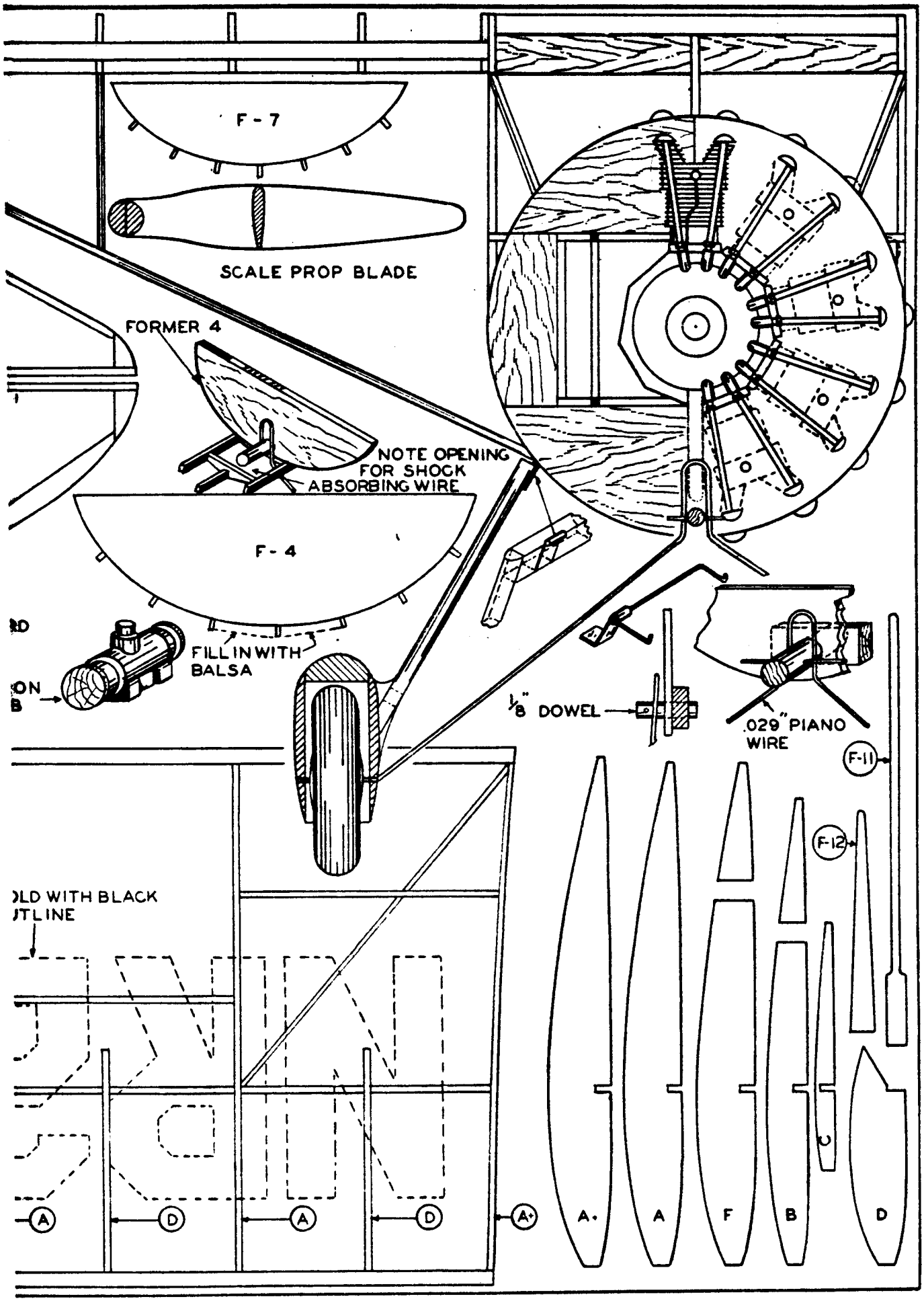
F - 7
SCALE PROP BLADE
FORMER 4
NOTE OPENING FOR SHOCK ABSORBING WIRE
F - 4
FILL IN WITH BALSA
1/8" DOWEL
.029" PIANO WIRE
F-11
F-12
OLD WITH BLACK
UTLINE
A
D
A
D
A+
A+
A
F
B
D