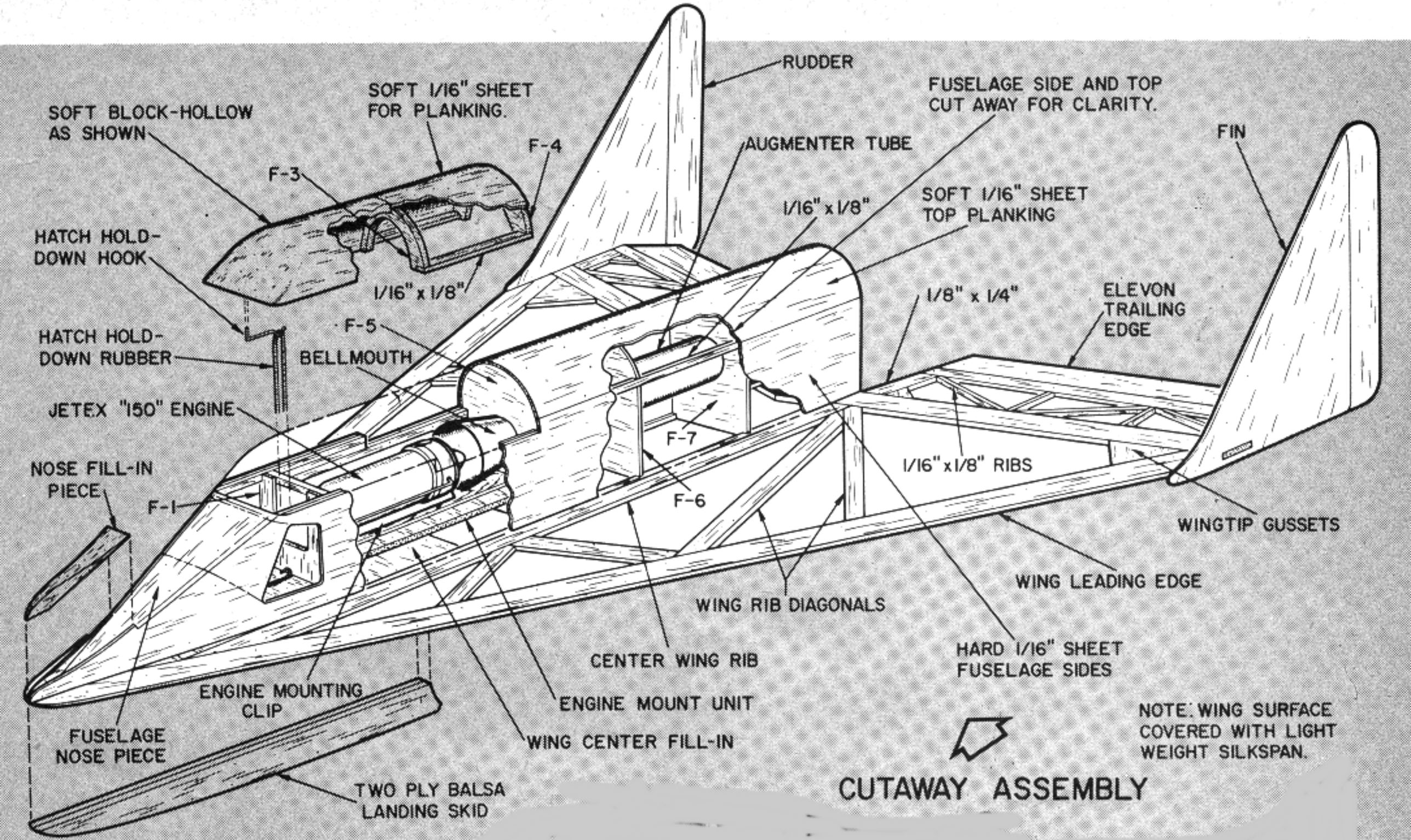
RUDDER
FUSELAGE SIDE AND TOP CUT AWAY FOR CLARITY.
SOFT 1/16" SHEET FOR PLANKING.
SOFT BLOCK-HOLLOW AS SHOWN
F-4
F-3
AUGMENTER TUBE
FIN
1/16" x 1/8"
SOFT 1/16" SHEET TOP PLANKING
HATCH HOLD-DOWN HOOK
1/16" x 1/8"
1/8" x 1/4"
ELEVON TRAILING EDGE
F-5
HATCH HOLD-DOWN RUBBER
BELLMOUTH
JETEX "150" ENGINE
F-7
NOSE FILL-IN PIECE
F-1
F-6
1/16" x 1/8" RIBS
WINGTIP GUSSETS
WING LEADING EDGE
WING RIB DIAGONALS
HARD 1/16" SHEET FUSELAGE SIDES
CENTER WING RIB
ENGINE MOUNTING CLIP
ENGINE MOUNT UNIT
FUSELAGE NOSE PIECE
WING CENTER FILL-IN
NOTE: WING SURFACE COVERED WITH LIGHT WEIGHT SILKSPAN.
TWO PLY BALSA LANDING SKID
CUTAWAY ASSEMBLY