AeroSport 1/2A

Engine : .049-.051
Fuselage Length : 23"
Wingspan : 31"
Radio : 2 channel
Wing type : Symmetrical
Wing Ribs : 13

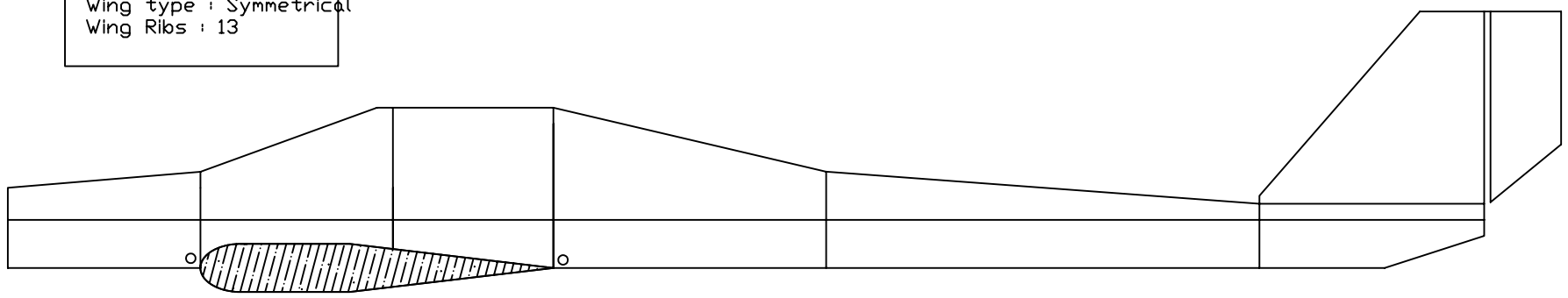
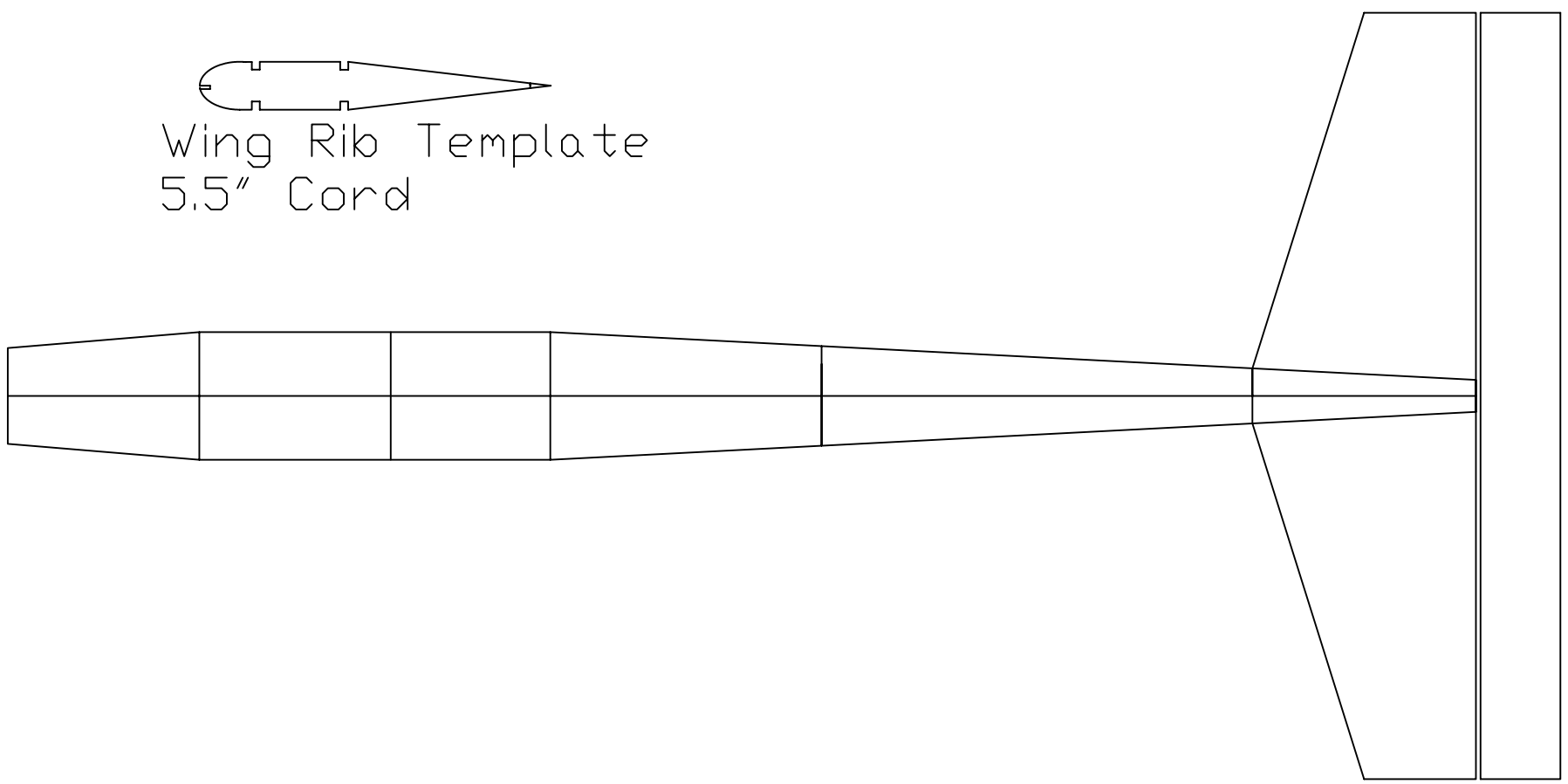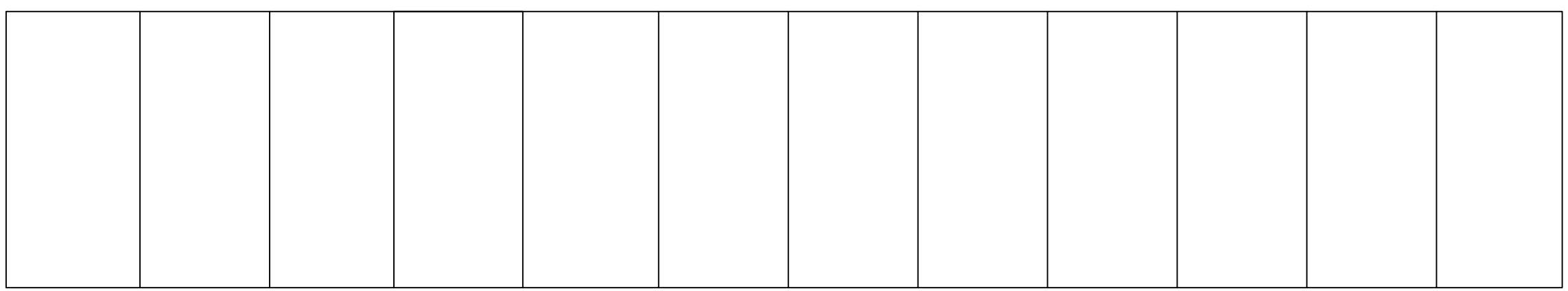
Wing Rib Template
5.5" Cord