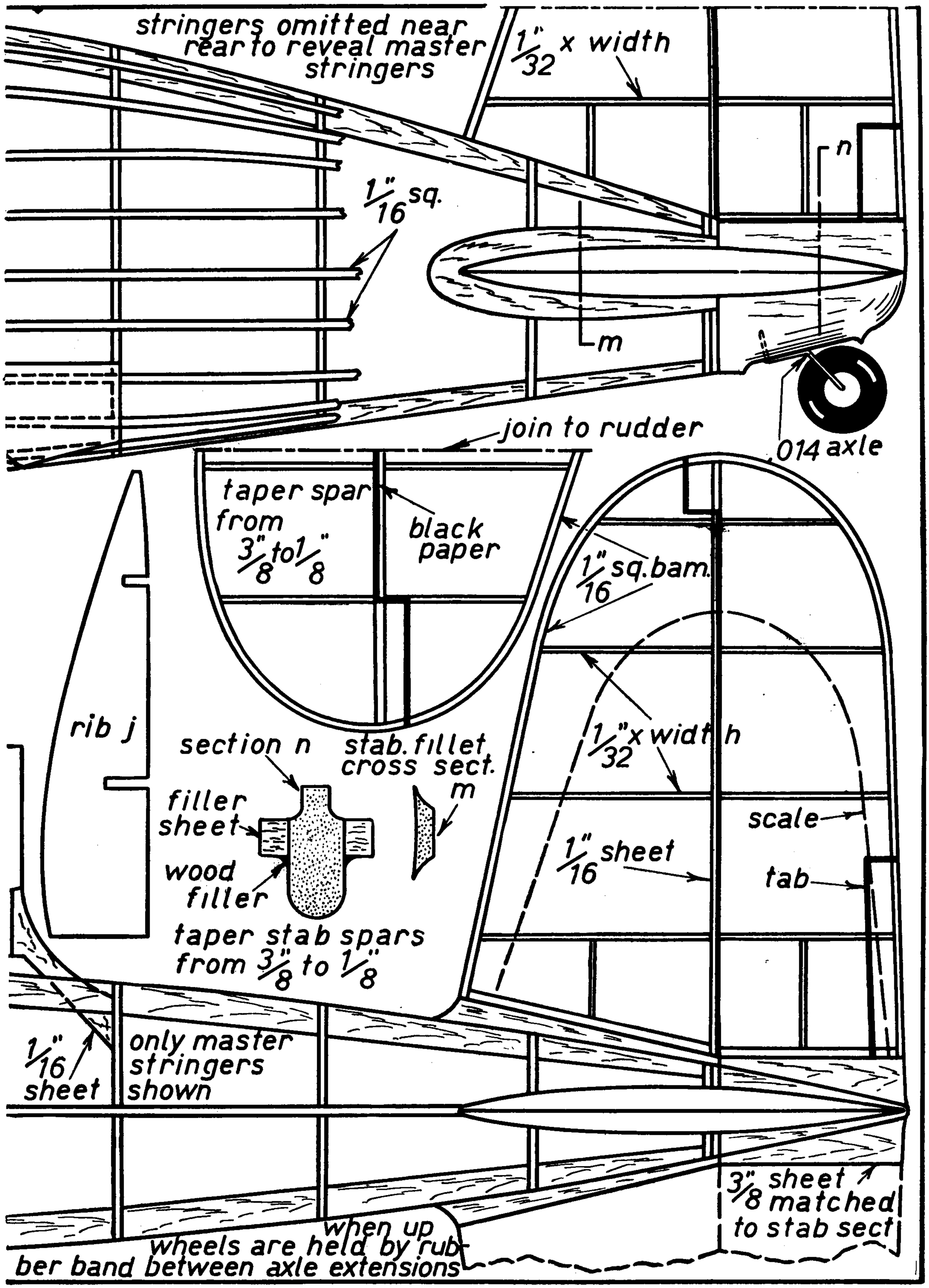
stringers omitted near rear to reveal master stringers
1/32" x width
n
1/16" sq.
m
join to rudder
.014 axle
taper spar from 3/8" to 1/8"
black paper
1/16" sq. bam.
rib j
section n
stab. fillet cross sect.
m
filler sheet
wood filler
taper stab spars from 3/8" to 1/8"
1/32" x width
scale
1/16" sheet
tab
1/16" sheet
only master stringers shown
3/8" sheet matched to stab sect
when up wheels are held by rubber band between axle extensions